THE NATIONAL INSTITUTE OF ENGINEERING

South Campus, Mysuru – 570008

Department of Electronics and Communication Engineering

VIRTUAL LAB REPORT :

ON

Linear Integrated Circuits (BEC456B)

TOPIC :

Characteristics and Parameters of Operational Amplifier (IC 741)

Submitted by :

Sagar B G (4NI24EC127)

CLASS : ECE "C" , SEM:4

Submitted to :

Dr Ashok Sir (Lab faculty)

Dr Remya Jayachandran ma'am(Lab in-charge)

Characteristics and parameters of Op-Amp :

Aim :To study and measure the characteristics and parameters of an Op-amp (IC-741):

A) Input bias current at inverting terminal
B) Input bias current at non-inverting terminal
C) Input offset current
D) Input offset voltage
E) Slew rate

Apparatus :

- IC 741 operational amplifier
- Dual power supply (±15 V)
- Function generator
- CRO
- Breadboard & connecting wires

Introduction :

An operational amplifier is a direct coupled high gain amplifier usually consisting of one or more differential amplifiers and followed by a level translator and an output stage. The output stage is generally a push-pull or push-pull complementary-symmetry pair. An operational amplifier is available as a single integrated circuit package.

Since an op-amp is a multistage amplifier, it can be represented by a block diagram as shown in Fig. 1

Figure . 1

The op-amp consists of three main stages :

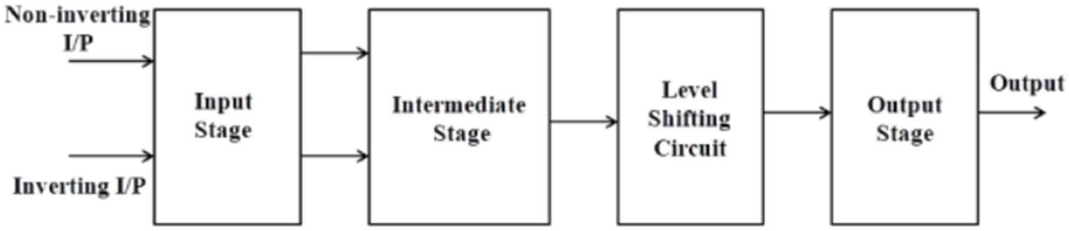

- **Input Stage:** A dual-input, balanced differential amplifier that provides most of the voltage gain and sets the input resistance.
- **Intermediate Stage:** Another differential amplifier (usually single-ended output) that further amplifies the signal; its high DC level is corrected by a **level-shifting circuit**.
- **Output Stage:** A push-pull complementary stage that increases output voltage swing, boosts current-driving capability, and provides low output resistance.

Schematic symbol :

The input stage of an op-amp is a differential amplifier with two inputs: **(+) non-inverting**, which gives an output in the **same phase**, and **(–) inverting**, which produces an output **180° out of phase** with the input.

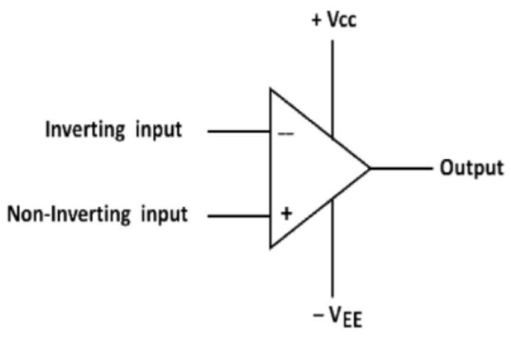

Fig-2: Schematic symbol of op-amp

Ideal Op-Amp Characteristics :

- **Infinite gain** so even tiny inputs are amplified strongly.
- **Infinite input resistance** so no current is drawn from the source.
- **Zero output resistance** allowing maximum power transfer to the load.
- **Infinite bandwidth** meaning all frequencies are amplified equally.
- **Infinite CMRR and slew rate** giving perfect noise rejection and instant output response.

Op-amp IC-741 pin configuration :

The pin configuration of IC-741 general purpose operational amplifier is shown in Fig. 6. The reference point of the chip is the notch at the top. The pins are numbered in a counter clockwise direction, starting at the notch.

- **Pin 1 & Pin 5 – Offset Null:**
  Used with a potentiometer to set the output to zero when no input is applied.
- **Pin 2 – Inverting Input (–):**
  Input here produces an output of **opposite polarity**.
- **Pin 3 – Non-Inverting Input (+):**
  Input here produces an output of the **same polarity**.
- **Pin 4 – Negative Supply (–V):**
  Connected to ground or negative voltage.
- **Pin 7 – Positive Supply (+V):**
  Connected to the positive power supply.
- **Pin 6 – Output:**
  Amplified signal appears here.
- **Pin 8 – NC:**
  No internal connection.

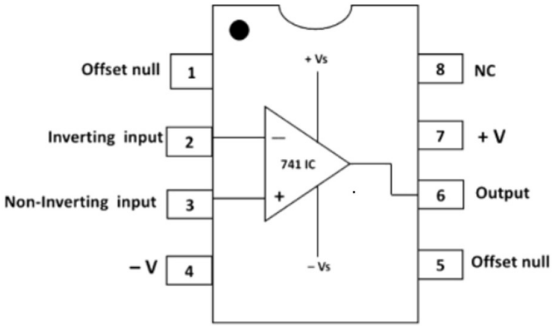

Parameters of an op-amp :

Input bias current : Input bias current I_B, is the average of the currents that flow into the inverting and non-inverting input terminals of the op-amp. In the form of an equation

$$I_B = (I_{B1} + I_{B2})/2$$

Types of Input Bias Current :

Input bias current has **two types**, one for each input terminal:

- **IB+ (Bias current at non-inverting input) :**
  The small DC current that flows into the **non-inverting (+)** terminal.
- **IB– (Bias current at inverting input) :**
  The small DC current that flows into the **inverting (–)** terminal.

These two currents are usually not equal due to transistor mismatch

A) Input bias current at inverting terminal (I_{B1}):

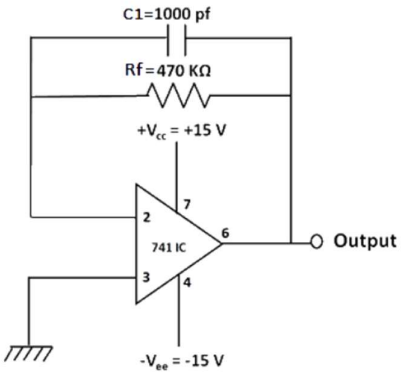

The inverting input of an op-amp produces an **output that is 180° out of phase** with the input.
So, when a signal is applied to the **(–)** terminal, the output becomes **opposite in polarity**

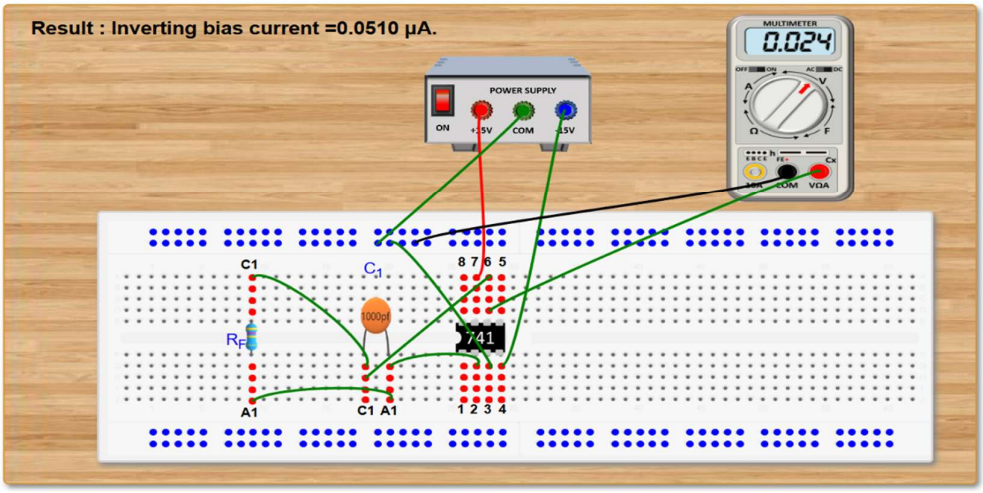

Calculation : $I_{B1} = V_o/R_f = 0.024/470K = 0.0510uA$

B) Input bias current at non-inverting terminal (I_{B2}) :

The non-inverting input produces an output that is **in the same phase** as the input.
So, a signal applied to the **(+)** terminal appears at the output with the **same polarity**.

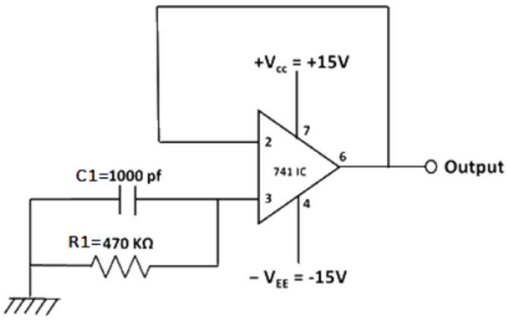

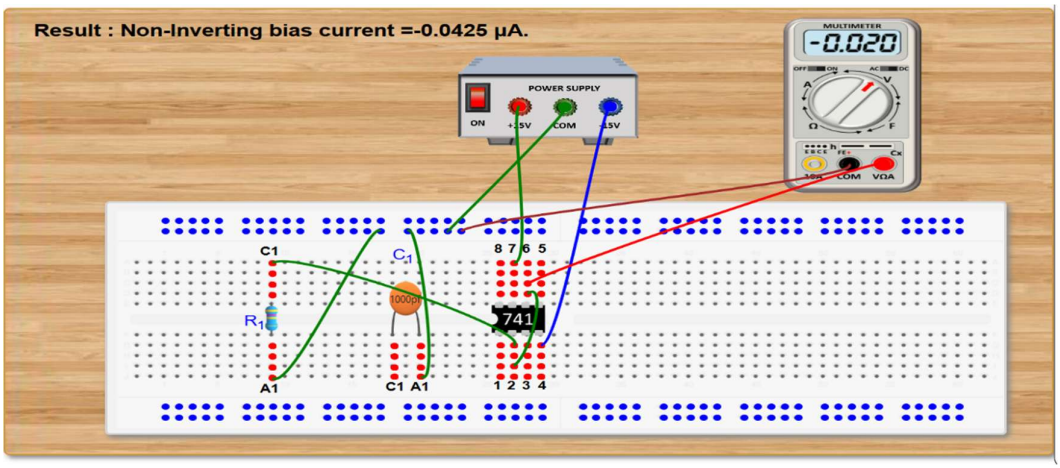

Calculation $I_{B2} = - V_o/R_1 = 0.020/470k = - 0.0425uA$

Bias Current :

$I_B = (|I_{B1}| + |I_{B2}|)/2 = (|0.0510uA| + |- 0.0425uA|) / 2$

$I_B = 0.04675\ \mu A$

C) Input offset current :

The algebraic difference between the currents into the inverting and non-inverting terminals is known as input offset current I_{io}(Fig. 4). In the form of an equation,

$$I_{io} = |I_{B1} - I_{B2}|$$

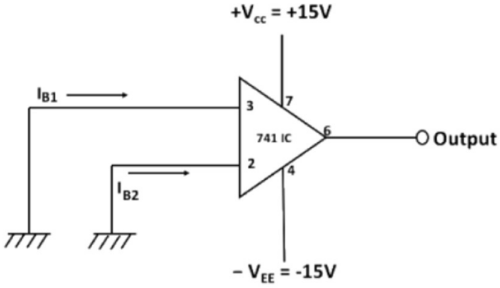

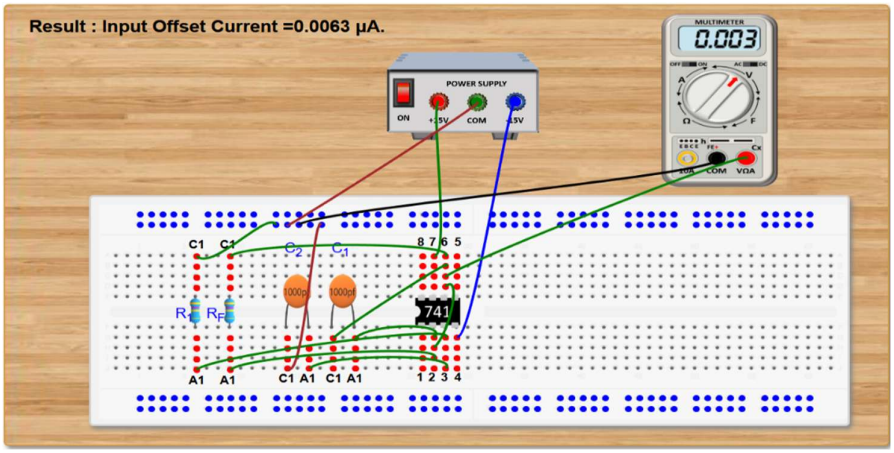

$I_{io} = |I_{B1} - I_{B2}| = |- 0.0425uA - 0.0510uA| = 0.0935uA$

Conclusion:

"The calculated Ios from individual bias currents (0.0935 µA) does not match the practical Ios (0.0063 µA) because the bias current experiments measure each input separately and include additional resistor and leakage effects. The direct Ios experiment gives the correct value, so the final Input Offset Current is taken as 0.0063 µA."

D) Input Offset Voltage (Vio) :

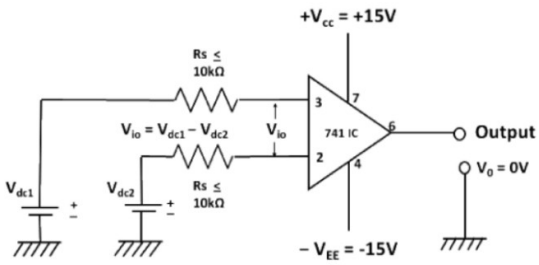

Input offset voltage is the small DC voltage that must be applied between the two input terminals of an op-amp to make the output zero. It can be positive or negative. For a **741C**, the maximum Vio is about **6 mV**, while precision versions can have values as low as **150 µV**. A smaller Vio means better matching of the input transistors.

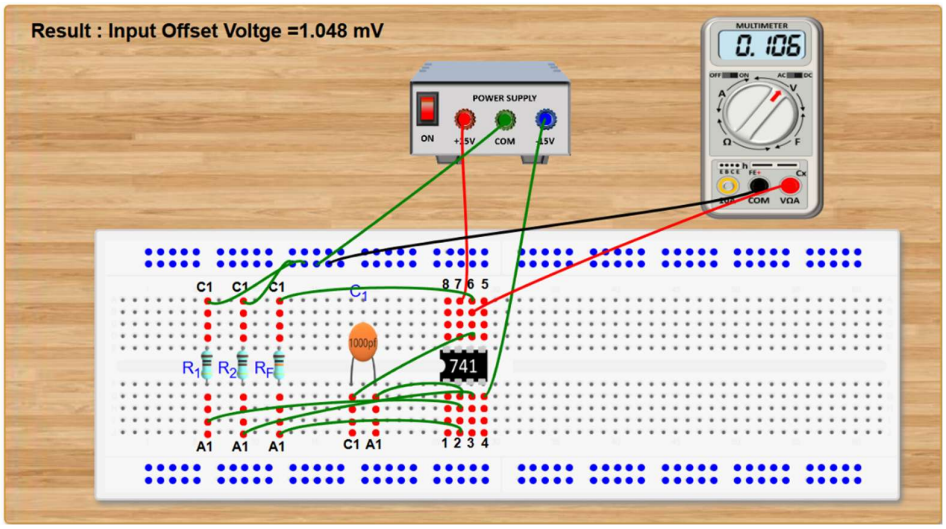

Result :

From the experiment, the measured **input offset voltage** is:

Vio = 1.048 mV

Conclusion :

"The measured input offset voltage (Vio) is 1.048 mV, which is significantly lower than the typical 6 mV limit of a standard 741C op-amp. This indicates good matching between the input terminals and proper functioning of the op-amp."

E)Slew rate :

Slew Rate (SR) is defined as the maximum rate of change of output voltage and is expressed in volts per micro-seconds

$$SR = (dV_o / dt)_{max} \ V/\mu s$$

- Slew rate tells **how fast the op-amp output can change** when the input changes. It is usually given at **gain = 1**.
- If the required output slope is **greater than the op-amp's slew rate**, the output cannot keep up → **distortion occurs**.
- The **741C op-amp** has a **low slew rate of 0.5 V/µs**, so it cannot be used for high-frequency applications.
- Modern op-amps like **LF351**, **µAF771**, and **MC34001** have a much higher slew rate of **13 V/µs**, and high-speed op-amps like **LM318** reach **70 V/µs**.

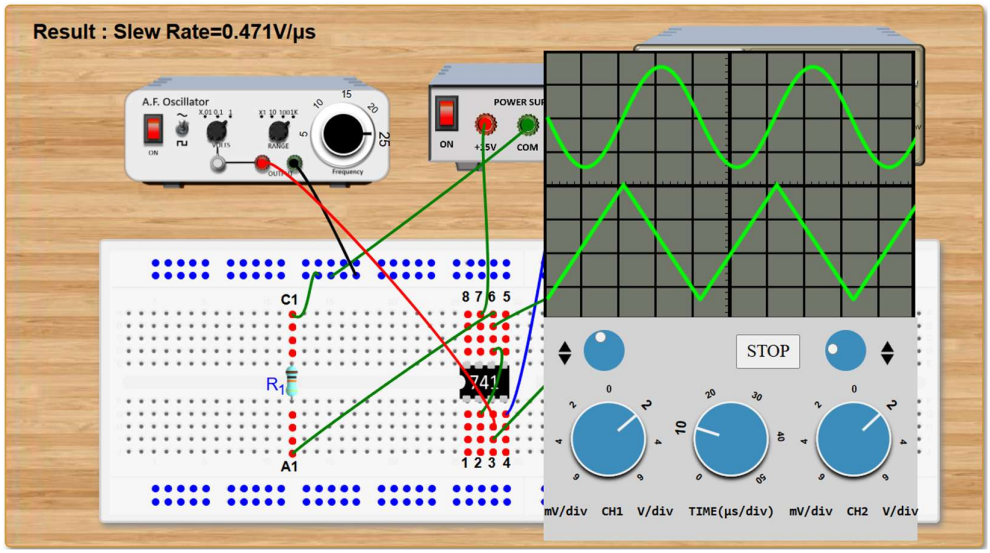

Result : From the experiment, the measured **slew rate** is

SR = 0.471 V/µs

Conclusion :

"The measured slew rate of the 741C op-amp is 0.471 V/µs, which is close to its typical value of 0.5 V/µs. This confirms that the op-amp is operating normally and exhibits the expected limitation in high-frequency applications."

Conclusion :

In this experiment, key input parameters of the 741 operational amplifier were measured.
The **input offset voltage**, **input bias currents**, **input offset current**, and **slew rate** were obtained and compared with theoretical values.
Minor differences between theoretical and practical values were observed due to transistor mismatch, temperature variations, breadboard leakage, component tolerances, and measurement limitations.
Overall, the 741 op-amp performed within expected specifications.

Final Measured Values Summary :

- Input Offset Voltage (Vio): 1.048 mV
- Input Bias Current (I_bias): 0.04675 µA
- Input Offset Current (Ios): 0.0063 µA
- Slew Rate (SR): 0.471 V/µs